MODEL 30A

3½ DIGIT

MULTIMETER

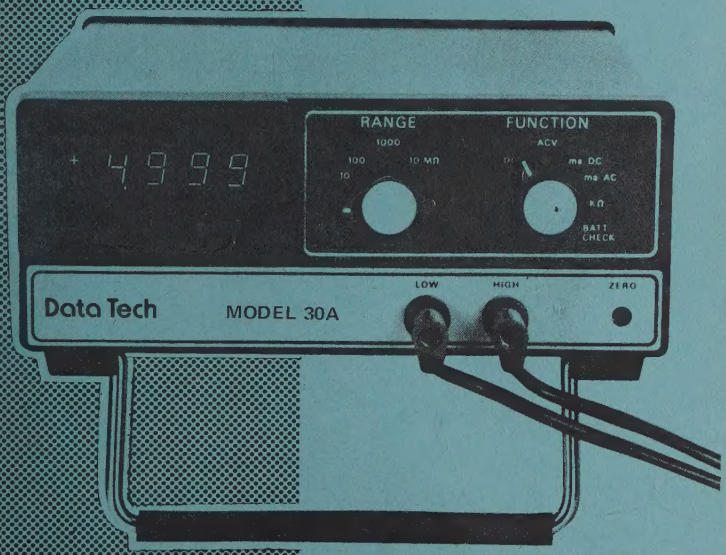

DATA TECH
A DIVISION OF PENRIL CORP.

Operation Manual

MODEL
30A

NOTICE

This document contains proprietary information which shall not be reproduced or transferred to other documents or disclosed to others, or used for manufacturing or any other purpose without prior written permission of Data Tech. Where related to a U.S. Government contact, such information may be disclosed as provided in such contract and may also be used by the U.S. Government for maintenance, servicing and repair purposes or as otherwise provided by such prior written permission.

WARRANTY

Within one year of delivery, we will repair or replace at our option your Data Tech product if any part of it is defective in material or workmanship. Labor is included. Just return the product to us freight prepaid.

TABLE OF CONTENTS

Section	
I	GENERAL DESCRIPTION AND SPECIFICATIONS
II	OPERATION
III	THEORY OF OPERATION
IV	CALIBRATION AND AID TO TROUBLESHOOTING
V	SPECIAL MODIFICATIONS
VI	DRAWINGS AND PARTS LISTS

Digitized by the Internet Archive
in 2025

https://archive.org/details/manualsplus_06979

SECTION I

GENERAL DESCRIPTION AND SPECIFICATIONS

1-1. GENERAL

1-2. The model 30A is a 3.5-digit digital multimeter (DMM). The measurement functions are dc voltage, ac voltage, dc current, ac current, and ohms. All measurement functions have five ranges except ohms which has six. The range limits are set at ±4999 counts. The display flashes for readings in excess of 4999 counts.

1-3. BATTERY/CHARGER OPTIONS

1-4. The model 30A is available with or without batteries, and functions in any of the following modes:

Battery only
Battery and charger
Charger only; batteries removed
Unit OFF; batteries charging

1-5. The unit also functions using any of the large variety of "D" size batteries available, however, only nickel cadmium batteries are rechargeable.

1-6. CHARGER OPTIONS

1-7. Chargers are available for operation from three power sources — 115, 100, and 230 volts rms, 50 to 60 hertz.

1-8. OPTIONAL IC SOCKETS

1-9. The user is afforded greater ease of repair when an assembly is specified with IC sockets. When this option is not specified, the IC's are soldered directly to the printed circuit board.

1-10. OPTIONAL SPARES AND ACCESSORIES

1-11. Table 1-2 shows a list of spares and accessories for the model 30A.

Table 1-1. Model 30A Assemblies

Assembly Number	Batteries (4)	IC Sockets	Main Power
549590-102			100Vrms
549590-103			115Vrms
549590-104			230Vrms
549590-105		X	100Vrms
549590-106		X	115Vrms
549590-107		X	230Vrms
549590-108	X		100Vrms
549590-109	X		115Vrms
549590-110	X		230Vrms
549590-111	X	X	100Vrms
549590-112	X	X	115Vrms
549590-113	X	X	230Vrms

1-11. SPECIAL MODIFICATIONS

1-12. The units which are modified to customer's special requirements do not reflect an assembly number as specified in Table 1-1. For details on special modifications, see Section V.

1-13. SPECIFICATIONS

1-14. See Table 1-3.

Table 1-2. Accessories and Spares

Assembly Number	Description
532062-100	Universal test lead kit
548829-100	Rack mount kit (single)
548830-100	Rack mount kit (side-by-side)
548434-100	Carrying case
532051-003	Battery (need 4)
532121-001	115Vrms charger
532121-002	230Vrms charger
532121-003	100Vrms charger
532104-100	High Voltage Probe
532103-100	Demodulator Probe

Table 1-3. Specifications

DC Volts

Range	Resolution	Input Impedance
±500mV	100μV	1000MΩ
±5V	1mV	1000MΩ
±50V	10mV	10MΩ
±500V	100mV	10MΩ
±1000V	1V	10MΩ

Accuracy (23 ±5°C; 90 day)
- ±500mV range ..... ±(0.1% rdg +0.05%FS)
- ±5V range ..... ±(0.1% rdg +0.04%FS)
- ±50V, ±500V, and ±1000V ranges ..... ±(0.15% rdg +0.04%FS)

Maximum Input Voltage
- All except ±1000V range 1000Vdc/rms
- ±1000V range 1400V

Response Time (5V Step) ..... 400ms max
Input Current ..... 100pA max ≈ doubles every 10°C
NMR (60Hz) ..... 38dB min
CMR (0 — 60Hz) 100dB min
CMV (line operation) ..... 1500V pk max

AC Volts

Range	Resolution	Input Impedance
±500mV	100μV	20MΩ; 60pF
±5V	1mV	20MΩ; 60pF
±50V	10mV	1MΩ; 60pF
±500V	100mV	1MΩ; 60pF
±1000V	1V	1MΩ; 60pF

Accuracy (23 ±5°C; 90 days)
- 45Hz to 5kHz ..... ±(0.5% rdg +0.05%FS)
- 5kHz to 10kHz ..... ±(1% rdg +0.05%FS)

Maximum Input Voltage 1000Vrms/dc
Response Time (5V Step) ..... 3s max
Input Frequency Range ..... 45Hz to 10kHz

Table 1-3. Specifications (Continued)

Ohms

Range	Resolution	Test Current
0 — 500Ω	0.1Ω	1mA
0 — 5kΩ	1Ω	1mA
0 — 50kΩ	10Ω	100μA
0 — 500kΩ	100Ω	10μA
0 — 5MΩ	1kΩ	1μA
0 — 50MΩ	10kΩ	100nA

Accuracy (23 ±5°C; 90 days) ..... ±(0.15% rdg +0.05%FS)
Maximum Input Voltage
Continuous 150Vrms
Short Term (<5 min) 250Vrms
Response Time
All except 0 — 50MΩ range ..... 400ms max
0 — 50MΩ range ..... 6s max

DC Current

Range	Resolution	Input Impedance
±500μA	100nA	1kΩ
±5mA	1μA	100Ω
±50mA	10μA	10Ω
±500mA	100μA	1Ω
±5A	1mA	≈0.2Ω

Accuracy (23 ±5°C; 90 days) ..... ±(0.3% rdg +0.05%FS)
Maximum Input Current (1) ..... 5A (fused)
Response Time (5V Step) ..... 500ms max

AC Current

Range	Resolution	Input Impedance
0 — 500μA	100nA	1kΩ
0 — 5mA	1μA	100Ω
0 — 50mA	10μA	10Ω
0 — 500mA	100μA	1Ω
0 — 5A	1mA	≈0.2Ω

Accuracy (23 ±5°C; 90 days)
45Hz to 5kHz ..... ±(0.7% rdg +0.1%FS)
5kHz to 10kHz ..... ±(1.2% rdg +0.1%FS)
Maximum Input Current (1) ..... 5A (fused)
Response Time (5V Step) ..... 3s max
Input Frequency Range ..... 45Hz to 5kHz

NOTES:
(1) **Limit ≈3A current applications to 1 min on 50 & 500mA ranges**

Table 1-3. Specifications (Continued)

General	
Conversion Time	≈70 — 105ms
Environment	
Operating Temperature	
w/Battery	0°C to 40°C
w/o Battery	0°C to 55°C
Storage Temperature	
w/Battery	-10°C to 50°C
w/o Battery	-10°C to 80°C
Relative Humidity	80% max
Physical Characteristics	
Weight	
w/Battery	3.0 lb (1.34kg)
w/o Battery	2.3 lb (1.05kg)
Size	2.5 x 6.25 x 9 in (63,5 x 168,8 x 228,6mm)
Signal Input	banana jacks (2)
Front Panel Controls	rotary switches (2)
Charger — ac Converter Input	back panel receptacle
Stand	2 in tilt-up for carrying or viewing ease
Display	1/3-in Gas discharge Flashes for counts greater than 4999.
Power	4 "D" size Ni Cd batteries or charger
Battery Charge Life	16 hrs min
Charge Time (4.6V Battery to Full Charge)	16 hrs max (in use or OFF with charger activated)
Charger	
Frequency	50 to 60Hz
Power	3W max
Voltage	115Vac std; 100 or 230Vac options

NOTE

With function set to "BATT" and range on "5," displays less than 4.600 indicate recharge required.

SECTION II
OPERATION

2-1. BATTERY INSTALLATION

2-2. To gain access to the batteries, remove the rear battery cover by first removing the four Phillips screws. As viewed from the rear, with the Model 30A in the upright position, direct the terminals of the batteries into the left-to-right battery positions as follows: minus, plus, minus, plus. These polarities are marked on the inside battery positions of the rear panel.

2-3. BATTERY CHARGING AND OPERATION

2-4. To charge the batteries, connect the charger plug to the receptacle in the rear plate as well as to the 50 — 60 hertz power main. To determine when the batteries require charging, set the function switch to "BATT." The batteries should never be allowed to discharge below a 4.6 volt "BATT" reading, as the life of the batteries is,

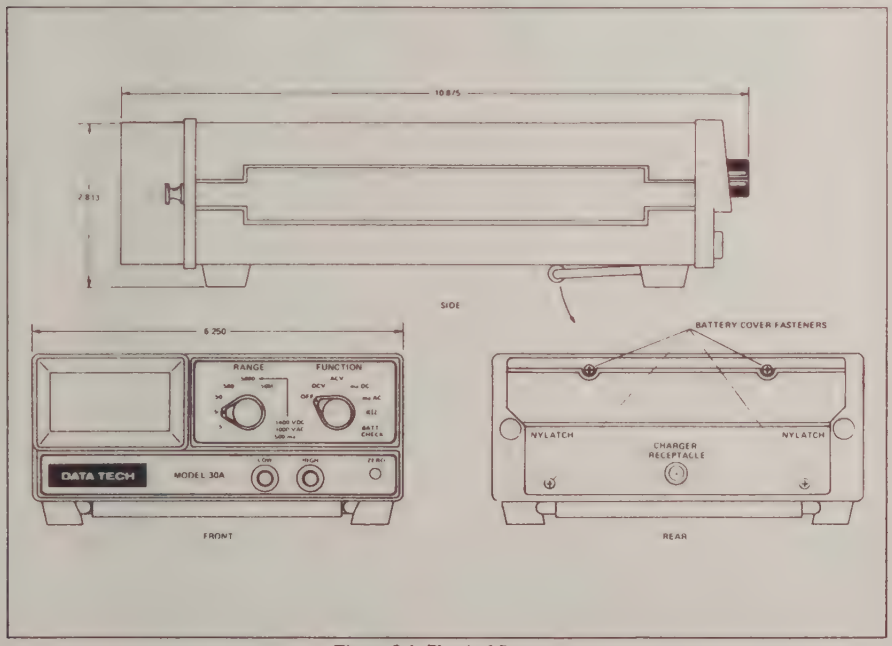

Figure 2-1. Physical Layout

thereby, shortened. The time required to reach full charge from the 4.6 volt point is 16 hours. The full-charge "BATT" reading is about 5.5 volts. The life of the batteries is not shortened by overcharging, and the Model 30A may be operated while battery charging is in process. A full charge yields a minimum of 16 hours operation. The battery life should be in excess of 1000 charge-discharge cycles. Do not attempt to charge other than nickel cadmium batteries.

2-7. OPERATION

2-8. Operating the model 30A consists of providing input connections and setting range and function switches consistant with the measured source.

CAUTION

If the display flashes, an overrange condition exists. Do not apply input levels in excess of those specified in Table 1-3 (Specifications). On the high ranges, the flash does not occur until the maximum input level is substantially exceeded.

Remove input before switching functions.

2-9. Function Switch

2-10. The function switch sets the Model 30A for either dc volt, ac volt, dc milliampere, ac milliampere, or kilohm measurements, also battery check and power OFF.

2-11. Range Switch

2-12. The range switch shifts the decimal point. The range switch also includes a 50 megohm position. Each function has five ranges — .5, 5, 50, 500, 5000, with the 50 megohm position providing an additional ohm position.

2-13. Zero

2-14. The zero potentiometer is accessible through a hole in the front panel. To set zero, short the input terminals and set the unit on the .5 range and Vdc function. Using a small screwdriver adjust for a 0000 display with the polarity toggling.

SECTION III

THEORY OF OPERATION

3-1. GENERAL DESCRIPTION

3-2. Dual Slope Integration (Figure 3-1)

3-3. The model 30A employs the dual-slope technique of converting analog levels to digital numbers. The integrator slope, during t1 time, is proportional to the input level. During t2 time, the slope is reversed and held constant, returning the integrator to the level of origin. When the level of origin is reached, the t2 count is displayed. This displayed number corresponds to the analog input.

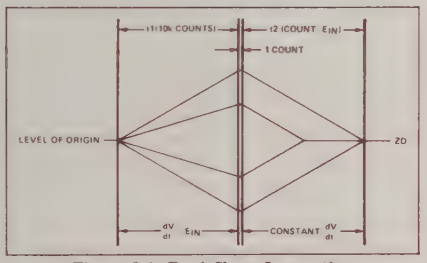

Figure 3-1. Dual Slope Integration

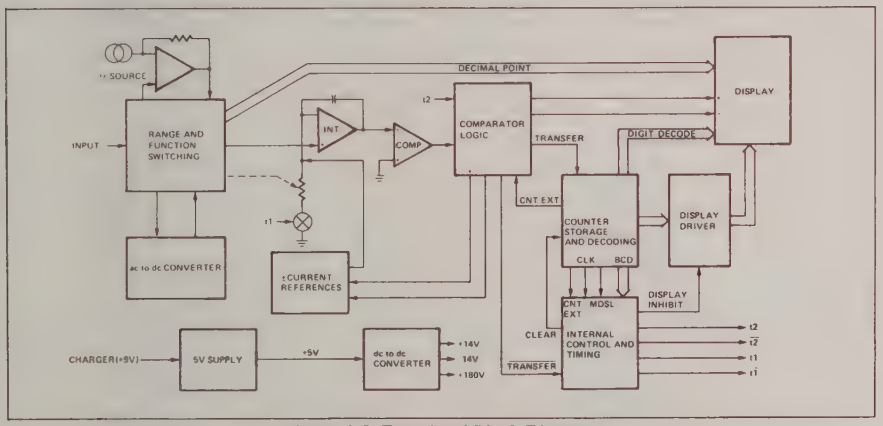

Figure 3-2. Functional Block Diagram

3-4. Functional Block (Figure 3-2)

3-5. The model 30A includes an integrator, comparator, plus and minus current references and various digital control, timing, and display circuitry to form the basic converter. Additional circuits are the power supply, ac-to-dc converter, ohms current source, and input switching, which add the function, range, and battery or line versatility.

3-6. The ANALOG INPUT is conditioned by range-and-function switch-selected circuits to provide a dc level to the integrator. During t1 time, the selected gain resistor of the integrator is connected to GROUND, and the current references are inhibited OFF. This condition makes the ANALOG INPUT the source for integration, and as a result, the integrator either assends or decends — depending on input polarity — at a rate proportional to the input level.

3-7. During t2 time, one of the current refences is enabled, the integrator gain resistor is disconnected from GROUND and is replaced by the enabled current reference as the source for the integrator. The selected current reference reverses the integration slope, returning the level to the point of origin.

3-8. When the point of origin is reached, the comparator changes state and a TRANSFER pulse is transmitted. This pulse both enters the accumulated t2 counts into storage and resets the counter, reinstating t1 time.

3-9. The stored t2 count is multiplexed and decoded into 4 by 4 and 4 by 7 formats of BCD and 7-segment codes. The 7-segment format is in turn demultiplexed for the 4-digit display.

3-10. INPUT AMPLIFIER INTEGRATOR AND COMPARATOR (Figure 3-3)

3-11. Referring to the simplified circuit, during t1 time, the current references are OFF and R36 is switched to GROUND. The ANALOG INPUT level is induced at the inverting input of the integrator amplifier due to feedback through C24. Thus, the current through R36 is a function of the ANALOG INPUT level and the t1 slope is a function of C24 and the current through R36. Note that in the actual circuit, R37 and R38 are placed in parallel with R36 in certain combinations of gain and function switch settings. When the value of R36 is thus reduced, the t1 slope is adjusted for sensitivity to lower input levels, as more integration current is now available per input level.

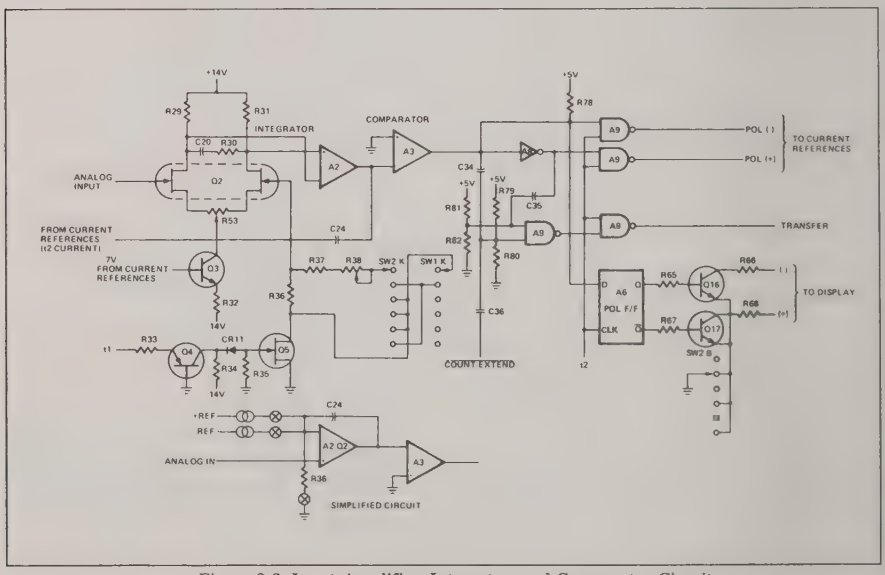

Figure 3-3. Input Amplifier, Integrator, and Comparator Circuitry

3-12. During t2 time, R36 is switched off of GROUND, and, depending upon the t1 slope, either the positive or negative current source is switched ON. This current is the reverse of t1 current, causing the integrator output to return to 0 volts. Zero volts are sensed by the comparator. When the comparator changes state during t2 time, a $\overline{\text{TRANSFER}}$ pulse results. When t2 becomes a "1," the POLARITY flip-flop is clocked and the state of the comparator is entered into storage, updating the display. If no ZERO DETECT is produced within 9999 counts (maximum t2 time) the TRANSFER pulse is induced by the COUNT EXTEND signal, which is issued at 9999 counts. SW2-B inhibits POLARITY in all but the dc volt and dc current functions.

3-13. COUNTER, STORAGE, AND DECODING CIRCUITRY (Figure 3-4)

3-14. The majority of this circuitry is incorporated in an LSI chip, the Mostek MK5002P. The MK5002P circuits include a counter, storage latches, decode circuitry and clocks. The CLEAR input resets the counter. The counter is then clocked through 9999 counts at which time a COUNT EXTEND pulse is issued. Continued clocking recycles the counter with the clocking now in the t2 time segment. The TRANSFER pulse transfers the accumulated t2 counts into storage latches. The latch outputs are multiplexed onto four data lines and four decode lines. The four data lines are in a BCD format and are available as outputs. the BCD data is decoded to the seven-segment format required by the displays. The data outputs, both BCD and seven-segment, are validated by the digit select lines such that a "1" on the MDSL line validates the most significant digit; a "1" on the 2DSL line validates the second significant digit and so forth. The cycle rate of the digit select lines is controlled by the scan rate which is controlled by C40 and R89. Note the decoding of the BCD lines. This decoding produces the $[(1+2) \cdot 4] + 8]$ term. This term is a "0" for digit counts above four, and along with the MDSL line, provides the overrange data.

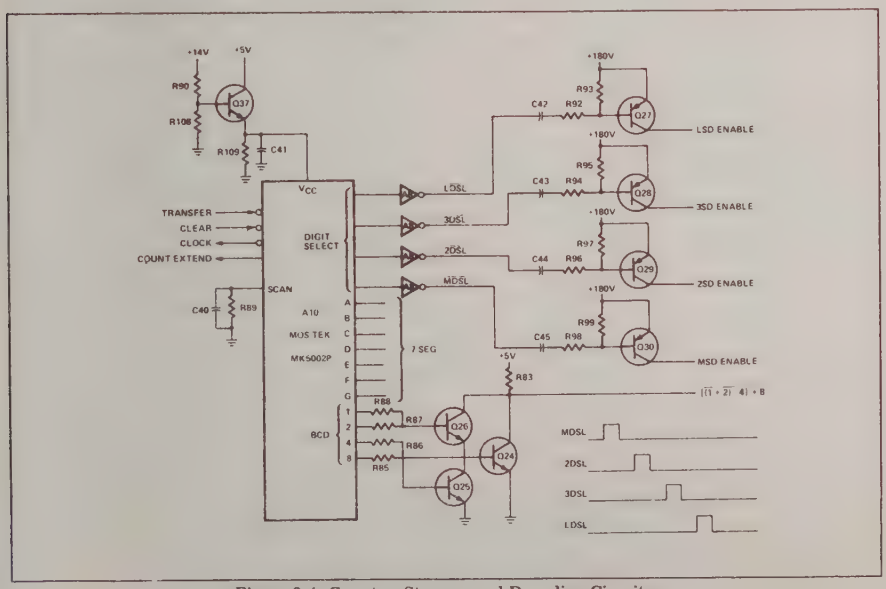

Figure 3-4. Counter, Storage, and Decoding Circuitry

3-15. INTERNAL CONTROL AND TIMING (Figure 3-5)

3-16. The internal control and timing establishes t1 and t2 times as well as the overrange flash and the CLEAR signals. The TRANSFER signal resets the CLEAR flip-flop which is subsequently set by the CLOCK. The negative CLEAR pulse edge resets the t2 flip-flop; the positive CLEAR pulse edge clocks, and thus sets, the t1 flip-flop. The negative CLEAR spike resets the counter in the MK500P. These conditions prevail as the counter counts through t1 time.

3-17. After 9999 counts, the COUNT EXTEND becomes a "1" and one count later returns to a "0." The leading COUNT EXTEND pulse edge resets the t1 flip-flop; the trailing COUNT EXTEND pulse edge clocks, and thus sets, the t2 flip-flop. These conditions prevail throughout t2 time. When a TRANSFER terminates t2 time the process repeats.

3-18. The overrange flip-flop remains set unless the [(1+2) . 4] +8 term is a "0" during the time the most significant digit is illuminated. When overrange conditions prevail, the "0" which holds the overrange flash flip-flop reset is removed. The overrange flash flip-flop now toggles on each positive t1 pulse edge and the display flashes alternate conversions.

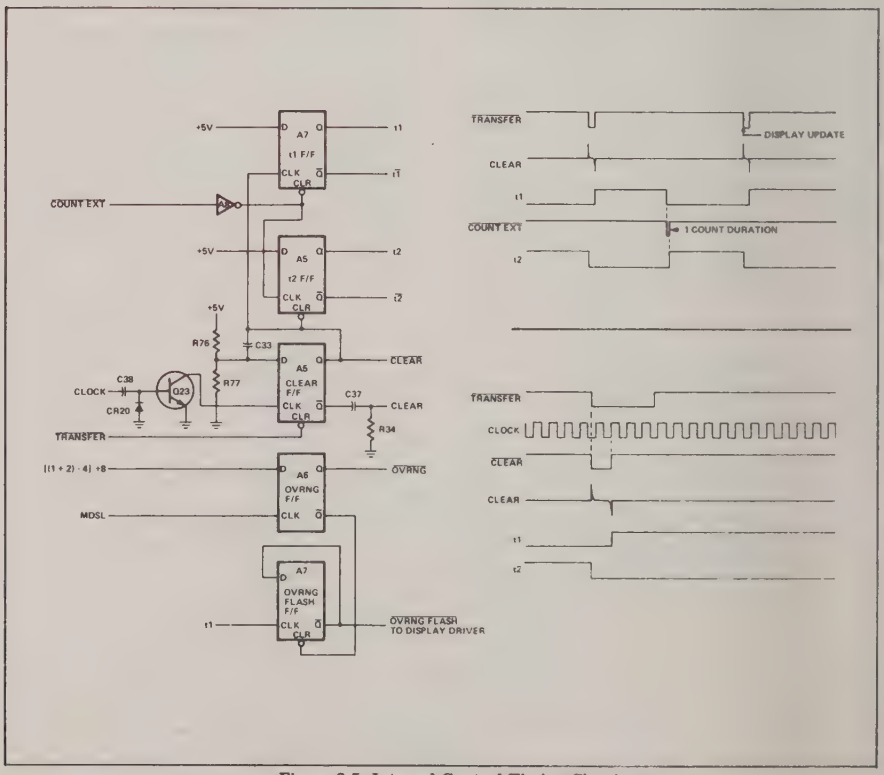

Figure 3-5. Internal Control Timing Circuitry

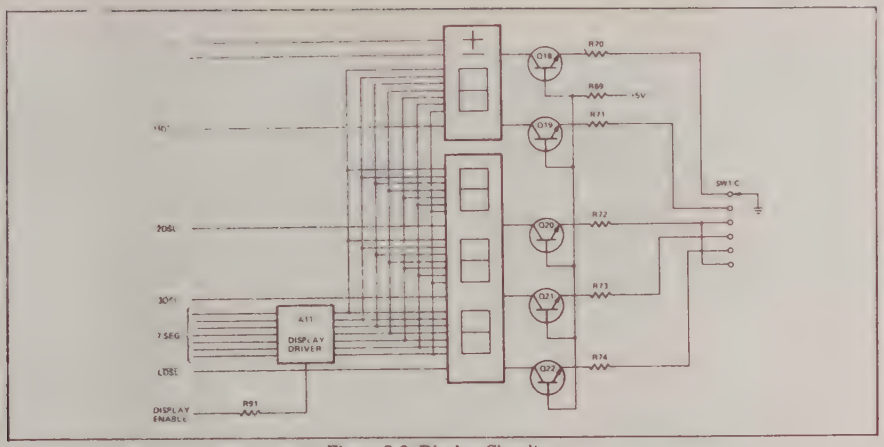

Figure 3-6. Display Circuitry

3-19. DISPLAY CIRCUITRY (Figure 3-6)

3-20. The display digits are serially enabled as the $\overline{\text{MDSL}}$ through $\overline{\text{LDSL}}$ lines each go to a "0," thereby, demultiplexing the 7-segment data. SW1-C with Q18 through Q22 determine the enabled decimal point. The DISPLAY ENABLE line is toggled for overrange conditions. R91 programs the display drive current.

3-21. CURRENT REFERENCES (Figure 3-7)

3-22. The positive current is supplied by Q6. This current is a function of the reference voltage determined by CR12 and Q9 and resistors R39, R40, and R41. The current through Q9 and CR12 is supplied by Q8 and is a function of the reference voltage determined by Q13 and CR13 and emitter resistor R43. The positive current is OFF when Q7 is ON (positive polarities).

3-23. The negative current is supplied by Q10. This current is a function of the reference voltage determined by Q13 and CR13 and resistors R46, R47, and R48. The current through Q13 and CR13 is supplied by Q12 and is a function of the reference voltage determined by Q9 and CR12 and emitter resistor R51. The negative current is OFF when Q11 is ON (negative polarities).

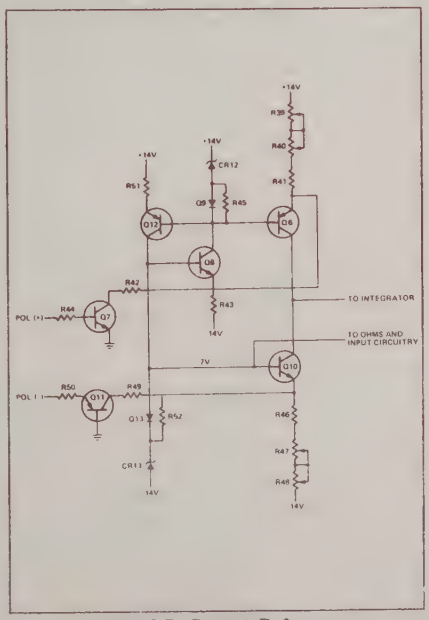

Figure 3-7. Current References

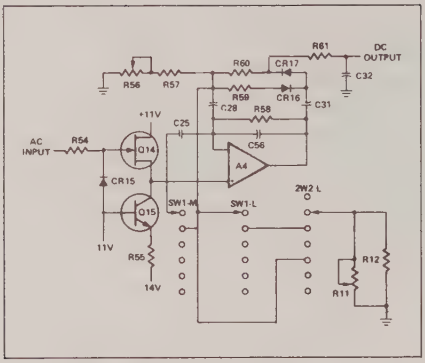

Figure 3-8. ac-to-dc Converter

3-24. ac-to-dc CONVERTER (Figure 3-8)

3-25. The ac-to-dc converter is a precision rectifier. The rectifier diodes, CR16 and CR17, are in the feedback to reduce nonlinearity. The gain is a function of the ratio of ac feedback resistors to the shunt resistance (R56 and R57). Note that the gain is increased in the ac functions and times-one range when R11 and R12 are in parallel with the shunt resistance. Q14 is a source follower with Q15 a current source.

3-26. INPUT SWITCHING – VOLTAGE FUNCTIONS (Figure 3-9)

3-27. Figure 3-9 shows only the wiring for the voltage functions. This circuitry determines the input configuration and attenuation. SW2-A determines whether the unit is ac or dc coupled. SW2-B shunts 20 megohms to GROUND in the ac position. SW2-N grounds the input to the ac-to-dc converter in the dc position. SW1-B connects the input directly to the ac-to-dc converter in positions one and two for the ac voltage function, and shunts R21 across R1 in positions one and two for the dc voltage function. In positions three four and five

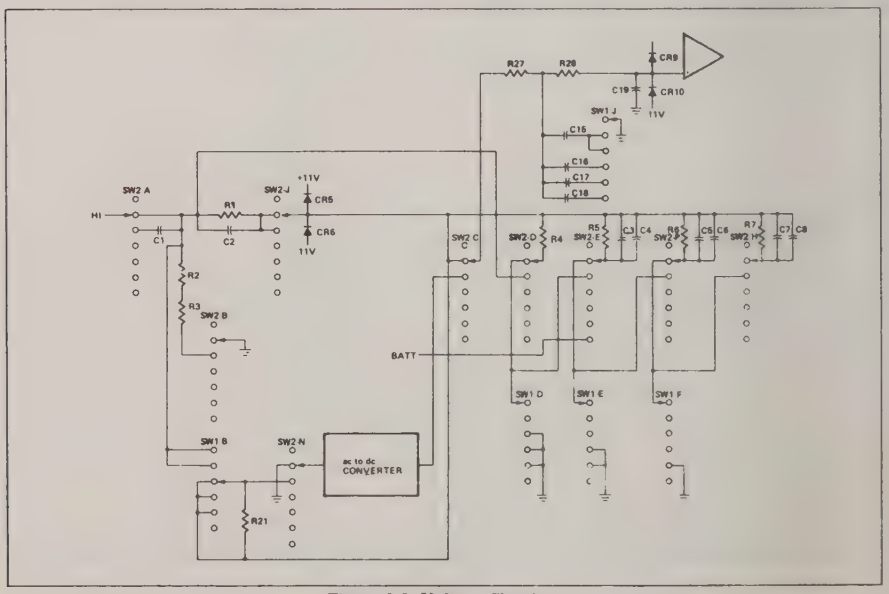

Figure 3-9. Voltage Circuitry

of SW1-B and the ac voltage function, the attenuator output is connected to the ac-to-dc converter, SW2-C connects the converter input to the attenuator output for the dc voltage function and connects the converter input to the ac-to-dc converter output for the ac voltage function. SW1-J selects capacitors to maintain the NMR for the various attenuator positions. SW2-D, E, F, and H with SW1-D, E, and F determine the attenuation.

3-28. INPUT SWITCHING – CURRENT FUNCTIONS (Figure 3-10)

3-29. Figure 3-10 shows only the wiring for the current functions. This circuitry determines the input configuration and the input resistance. SW2-A connects the input high to the input resistor through F1. SW1-A selects the input resistance value. SW2-C and SW2-N place the ac-to-dc converter in series with the input high and the converter input for the ac current function. The circuitry including CR1 through CR4 and R13 and R14 provides protection for the input resistors by preventing voltages in excess of about 1 volt from developing across the input resistance. Under normal conditions, CR1 and CR2 are reverse biased by R13 and R14.

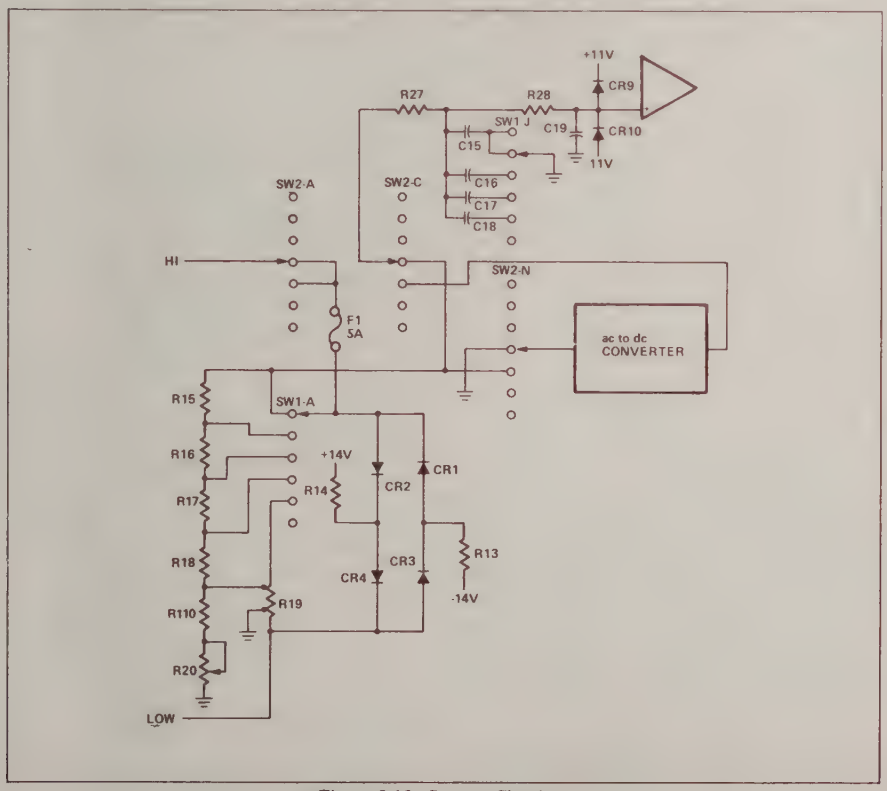

Figure 3-10. Current Circuitry

Figure 3-11. Ohm Circuitry

3-30. INPUT SWITCHING – OHM FUNCTION (Figure 3-11)

3-31. Figure 3-11 shows only the wiring for the ohm function. This circuitry determines the current flowing in the unknown, The basic circuit is a current injector. Referring to the simplified circuit, the current from the current source flows through R25, R26. The voltage across R25, R26 also appears across the range control resistor. The value of the range control determines the current through the range control and, therefore, the current through the unknown.

3-32. In the actual circuitry, Q1, R23, and R24 comprise the current source and the range control resistance is selectable via SW1-H.

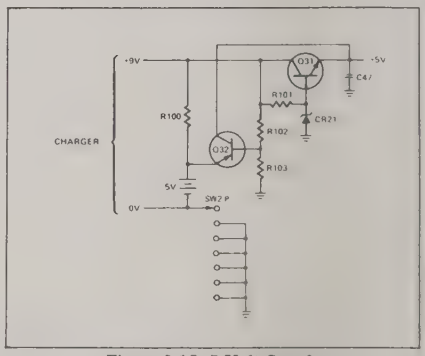

Figure 3-12. 5-Volt Supply

3-33. 5-VOLT SUPPLY (Figure 3-12)

3-34. The +9 volts are only available when the charger is connected. With +9 volts connected, Q32 is OFF, the batteries — if present — receive charge current through R100, and the +5-volt output is from the zener controlled pass transistor.

3-35. When the +9 volt is not connected, Q32 is biased ON by R103. Q32 now connects the battery directly to the +5-volt output.

3-36. dc to dc CONVERTER (Figure 3-13)

3-37. At turn on, Q34 turns ON, Q33 is biased OFF and t1 is driven to saturation. Saturation causes the field of t1 to collapse. As the field collapses into the reverse direction, Q34 turns OFF and Q33 turns ON. Q33 now drives t1 to saturation in the reverse direction. The ac voltage supplied to t1 is, thus, the result of Q33 and Q34 alternately driving t1 from saturation level to saturation level.

3-38. The ±14-volt regulators are full-wave rectifiers with capacitance input filters and zener controlled pass transistors. The +180 volts are supplied by a voltage doubler.

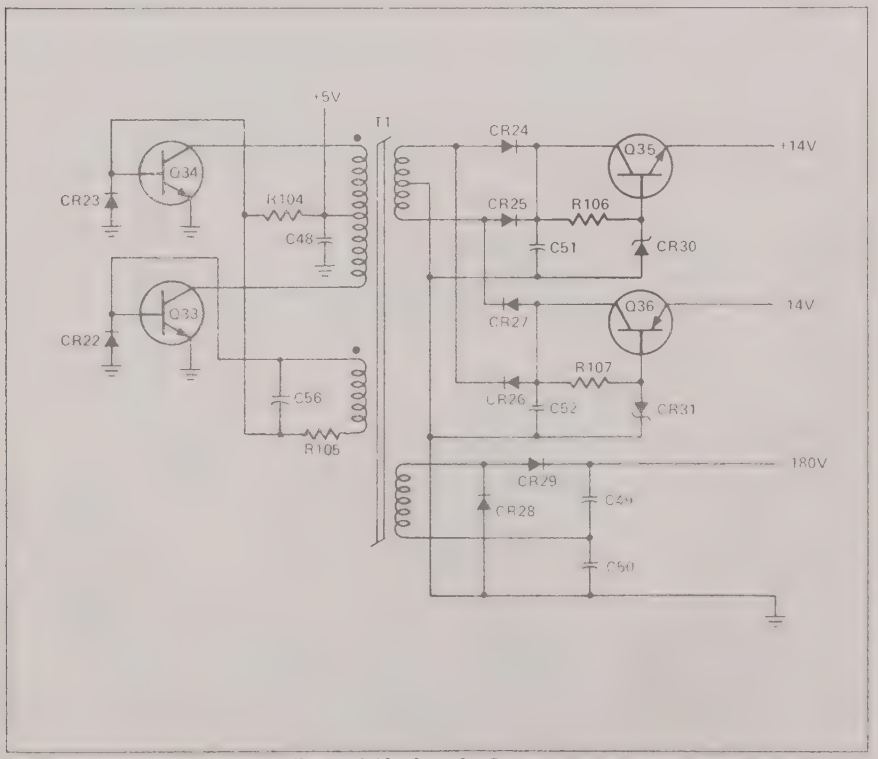

Figure 3-13. dc-to-dc Converter

SECTION IV
CALIBRATION AND AID TO TROUBLESHOOTING

4-1. TEST EQUIPMENT

4-2. Test equipment suitable for calibration or repair is specified in Table 4-1.

4-3. CALIBRATION

4-4. The accuracy of the model 30A should be verified at 90-day invervals. The accuracy is confirmed when known inputs yield corresponding displays, within specified accuracy.

4-5. CALIBRATION PROCEDURE (Figure 4-1)

1. Pull the two nylatch fasteners on the rear plate, and remove the top cover and shield.

Table 4-1. Test Equipment

Test Equipment	Accuracy
Voltmeter	0.01%
dc Voltage Standard	0.02%
ac Voltage Standard	0.1%
Resistance Standard	0.02%
dc Current Standard	0.05%
ac Current Standard	0.1%

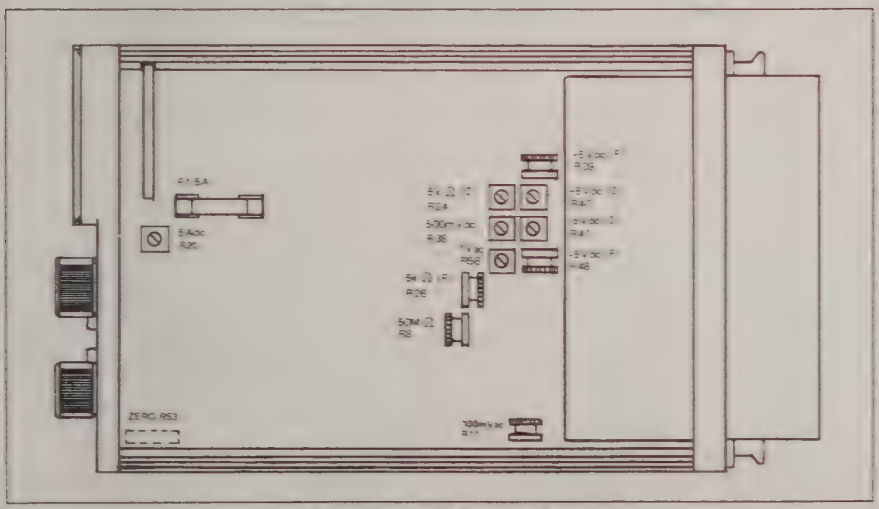

Figure 4-1. Calibration Adjustment Locations

2. Replace and secure the rear plate by repositioning the plate and pressing the nylatch fasteners.

3. If the unit is being calibrated without the charger, verify a display of 4.600 or greater with the function switch set to "BATT."

4. Allow a 5-minute warm-up and proceed with Table 4-2.

4-6. REASSEMBLY

4-7. The easiest method for reassembling the rear panel is: After the chassis components are in place, position the unit with the front panel facing you. Seat and fasten the right rear side followed by the left rear side rather than attempting to seat both sides at once. The unit will tolerate the slight cocking of the rear panel required during this procedure.

4-8. FACTORY REPAIR

4-9. Data Tech maintains a factory repair facility. Our trained technicians are available to repair your instruments with a minimum of inconvenience to you. Refer to the customer service card inside the back cover for equipment return instructions.

4-10. AID TO TROUBLESHOOTING

4-11. The checks which follow should serve to isolate the problem to a specific functional area. When specified results are not obtained, reference is given to the applicable drawing in Section VI and the applicable paragraph in Section III. Refer to the applicable layout drawing in Section VI for component locations.

NOTE

Before attempting any repairs, read the warranty on page iii.

4-12. The following checks are arranged in an order of dependency and, therefore, the order of testing should be as presented.

4-13. A complete access to the internal assemblies requires only that the two nylatch fasteners on the rear panel be pulled. The rear panel is then withdrawn and the top and bottom covers and shields removed. Return the rear panel and push the nylatch fasteners to make the unit operational with top and bottom covers removed.

4-14. Power Supply Checks

4-15. Perform the checks specified in Table 4-3.

Table 4-2. Calibration Adjustments

Input	Function	Range	Adjust	Display
Short	VDC	0.5	ZERO (R53) (Front Panel)	0.0000
+4.000V	VDC	5	+5VDC (C) (R40) & +5VDC (F) (R39)	+4.000
-4.000V	VDC	5	-5VDC (C) (R47) & -5VDC (F) (R48)	-4.000
+0.4000V	VDC	0.5	500mVDC (R38)	+0.4000
4.000kΩ	KΩ	5	5KΩ (C) (R24) & 5KΩ (F) (R26)	4.000
10.000MΩ	KΩ	50M	50KΩ (R8)	10.00
4.000Vrms 5kHz	VAC	5	5VAC (R56)	4.000
0.4000Vrms 5kHz	VAC	0.5	500mVAC (R11)	0.4000
2Adc	mADC	5000	5ADC (R20)	2000

Note: C = coarse; F = fine

Table 4-3. Power Supply Checks

Test Points HI	Test Points LO	Conditions	Voltage (dc)	For Failure See
C46 "+"	C46 "–"	Charger In	+9V	Dwg 549587, pg 2; par 3-33
C47 "+"	C47 "–"	Charger In	+5V	Dwg 549587, pg 2; par 3-33
C47 "+"	C47 "–"	Charger Out	BATT V (≈5V)	Dwg 549587, pg 2; par 3-33
C26 "+"	C26 "–"	—	+14V	Dwg 549587, pg 1; par 3-36
C27 "–"	C27 "+"	—	-14V	Dwg 549587, pg 1; par 3-36
CR18 cath	CR18 anod	—	+11V	Dwg 549587, pg 1
CR19 anod	CR19 cath	—	-11V	Dwg 549587, pg 1
Q13 col	C13 "–"	—	≈ -7V	Dwg 549587, pg 1; par 3-21

Note: When the specified voltage is not present because of loading, components may have to be removed to isolate the circuit drawing excessive current (see drawing 548477).

4-16. Converter Checks

4-17. Perform the checks specified in Table 4-4.

4-18. Input Function Checks

4-19. Check each function using a corresponding input. Refer to Table 4-5 for failure references.

Table 4-4. Converter Checks

Test Points HI	Test Points LO	Function	Range	Input	Results	For Failure See
Q23-col	C47 "–"	—	—	—	100 — 170kHz clock	Dwg 549587, pg 2; par 3-13 & 3-15
A10-10	C47 "–"	—	—	—	2 — 5kHz clock	Dwg 549587, pg 2; par 3-13 & 3-15
Q27-col	C47 "–"	—	—	—	≈400μs @ +180V low signal level +100 — +150V	Dwg 549587, pg 2; par 3-13
Q28-col	C47 "–"	—	—	—	≈400μs @ +180V low signal level +100 — +150V	Dwg 549587, pg 2; par 3-13

Table 4-4. Converter Checks

Test Points HI	Test Points LO	Function	Range	Input	Results	For Failure See
Q29-col	C47 "–"	—	—	—	≈400μs @ +180V low signal level +100 — +150V	Dwg 549587, pg 2; par 3-13
Q30-col	C47 "–"	—	—	—	≈400μs @ +180V low signal level +100 — +150V	Dwg 549587, pg 2; par 3-13
A8-6	C47 "–"	—	—	—	≈10μs @ 0V pulse	Dwg 549587, pg 2; par 3-13 & 3-15
A2-6	C47 "–"	dcV	5	+4.900V	dual slope wave; pos then neg slopes	(1) Dwg 549587, par 3-10,3-13, 3-15, 3-21, 3-26
A2-6	C47 "–"	dcV	5	-4.900V	dual slope wave; neg then pos slopes	(1) Dwg 549587, par 3-10, 3-13, 3-15, 3-21, 3-26
—	-	dcV	5	-0.001V	"–" display	Dwg 549587, pg 2; par 3-10 & 3-19
—	—	dcV	5	+0.001V	"+" display	Dwg 549587, pg 2; par 3-10 & 3-19
—	—	acV, mAac kΩ	5	open	no polarity indication	Dwg 549587, pg 2; par 3-10
—	—	dcV	5	0 — 4.999V	verify all display digits 0 — 9 except verify MSD 0 — 4	Dwg 549587, pg 2; par 3-13, 3-15, 3-19
—	—	dcV	.5 — 5000	—	corresponding decimal point position	Dwg 549587, pg 2; par 3-19
—	-	—	50M	—	decimal point @ 48.88	Dwg 549587, pg 2; par 3-19
—	—	dcV	5	0 — 4.999V	no display flash	Dwg 549587, pg 2; par 3-15
—	—	dcV	5	5.000V — (2) 9.999V	display flash	Dwg 549587, pg 2; par 3-13 & 3-15

(1) The feedback loop of the converter prevents checks which lead directly to the malfunctioning functional area. The circuitry encompasses the following IC's: A2, A3, and A5 through A10; also, transistors Q2 through Q13.

(2) Display value not necessarily related to input, past ≈6.000V

Table 4-5. Function Failure References

Function	For Failure See
dcV	Dwg 549587, pg 1; par 3-26
acV	Dwg 549587, pg 1; par 3-24 & 3-26
mAdc	Dwg 549587, pg 1; par 3-28
mAac	Dwg 549587, pg 1; par 3-24 & 3-28
kΩ	Dwg 549587, pg 1; par 3-30
(1) BATT	Dwg 549587, pg 1; par 3-26

(1) Batteries must be installed

PK 714 S46 7160

NOTES

714
S46
7160

SECTION V
SPECIAL MODIFICATIONS

(TO BE FILLED IN WHEN UNITS ARE MODIFIED)

DESCRIPTION OF MODIFICATION(S)

CHANGES IN SPECIFIED OPERATION(S)

DRAWINGS APPLICABLE TO MODIFICATION(S)

SECTION VI

DRAWINGS AND PARTS LISTS

6-1. GENERAL

6-2. This section contains schematics, layout drawings, and parts lists.

6-3. DRAWINGS AND PARTS LISTS

Drawing Number	Title
549590	3-1/2 Digit Multimeter Assembly, Model 30A
549587	3-1/2 Digit Multimeter, Schematic Diagram, Model 30A
549589 page 2	Mother Board Assembly, 3-1/2 Digit Multimeter, Model 30A
549589	Mother Board Assembly, Parts List
548313	Display Board Assembly, 3-1/2 Digit, Model 30A
548313	Display Board Assembly, Parts List

TABLE I - ASSEMBLY VARIATIONS

[illegible]	WITH	[illegible]	[illegible]	BATTERY & REQD
[illegible]	100V CHARGER	[illegible]	[illegible]	
549590-103	115V CHARGER	549590-100	532121-001	
[illegible]	220V CHARGER	[illegible]	[illegible]	
549590-105	100V CHARGER W/BOOTS	549590-101	532121-003	
549590-106	115V CHARGER W/BOOTS	549590-101	532121-003	
[illegible]	W/BOOTS	[illegible]	[illegible]	
[illegible]	[illegible] W/BATTERIES	[illegible]	[illegible]	[illegible]
549590-109	115V CHARGER W/BATTERIES	549590-100	532121-001	532051-003
[illegible]				
549590-111	100V CHARGER W/BATT & BOOTS	549590-101	532121-003	532051-003
[illegible]	115V CHARGER W/BATT & BOOTS	[illegible]	[illegible]	[illegible]
[illegible]	W/BATT & BOOTS	[illegible]		

							25
	REF	REF	548269-001	SHIPPING CONTAINER			24
	REF	REF	549593-001	MANUAL			23
	REF	REF	532062-001	TEST LEADS KIT			22
							21
		1	548396-001	LABEL, CALIBRATION			20
			548397-001	SERIAL TAG			19
	1		549275-001	SPRING, GND			18
							17
							16
	2		532021-001	SCREW, PPH, 6-19 X 1.00			15
	2		548283-001	PANEL, SIDE			14
			[illegible]	[illegible]			13
	1		817485-000	BANANA JACK, RED			12
	2		[illegible]	KNOB, [illegible]			11
	2		532036-003	DETENT, ADJUSTABLE			10
	1		549287-005	OVERLAY, LOWER			9
	1		549616-001	OVERLAY, UPPER			8
	1		548281-001	READOUT WINDOW			7
	1		548282-001	PANEL, FRONT			6
	REF	1	549590-200	FRONT PANEL ASSY			5
							4
							3
	1	1	549590-300	REAR MODULE ASSY			2
		1	549[illegible]	[illegible]			1
				[illegible]			
	1		549589-201	MOTHER BOARD ASSY	N/S		

ASSEMBLY 3½ DIGIT MULTIMETER
MODEL 30A

CODE IDENT NO	SIZE		
14506	D	549590	C
SCALE -		SHEET 1 OF 2	

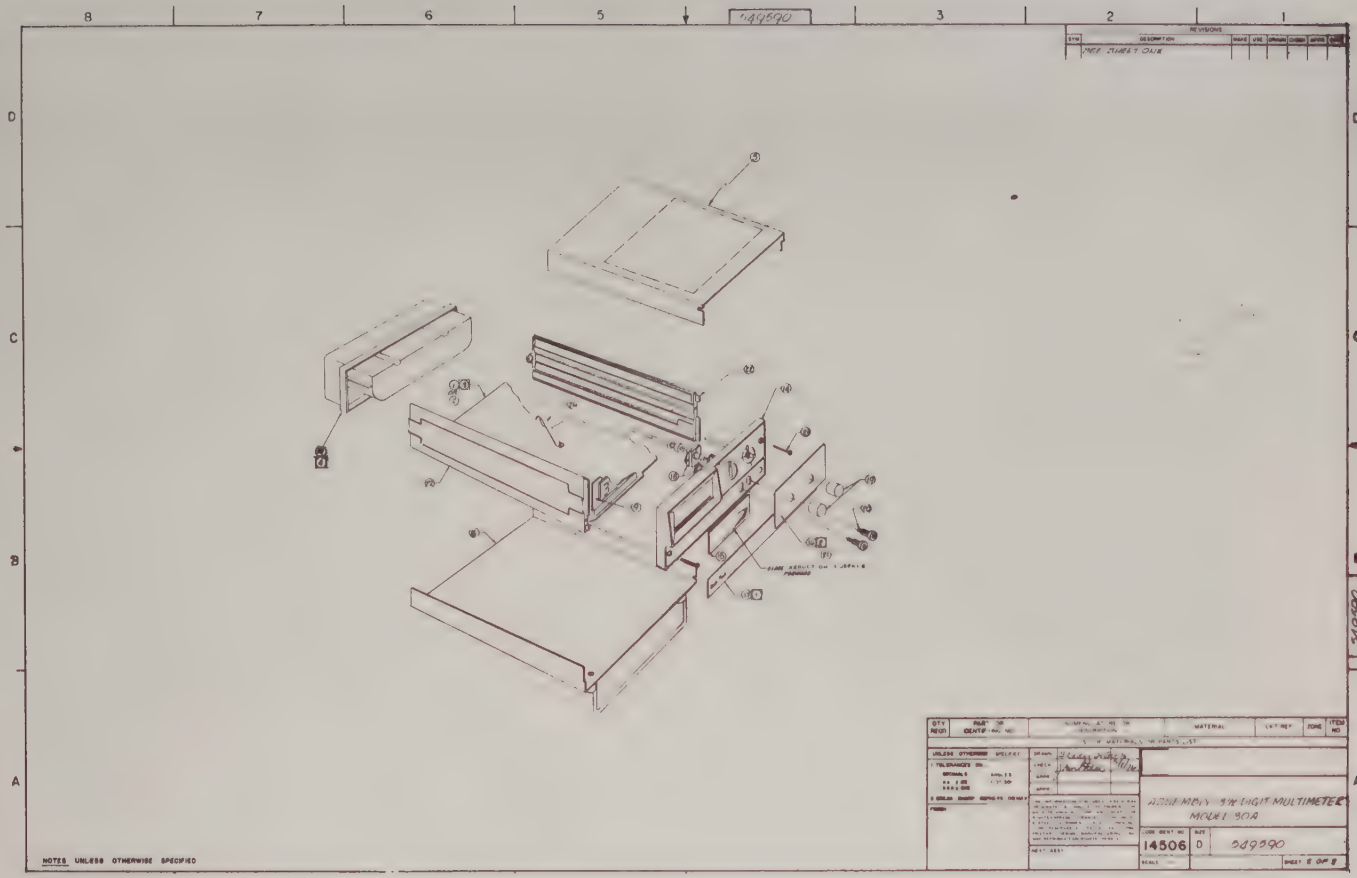
549590
REVISIONS
SYM
DESCRIPTION
MATERIAL
ITEM NO
UNLESS OTHERWISE SPECIFIED
ASSEMBLY 3½ DIGIT MULTIMETER
MODEL 30A
CODE IDENT NO
14506
SIZE
D
549590
SCALE
SHEET 2 OF 2
NOTES UNLESS OTHERWISE SPECIFIED

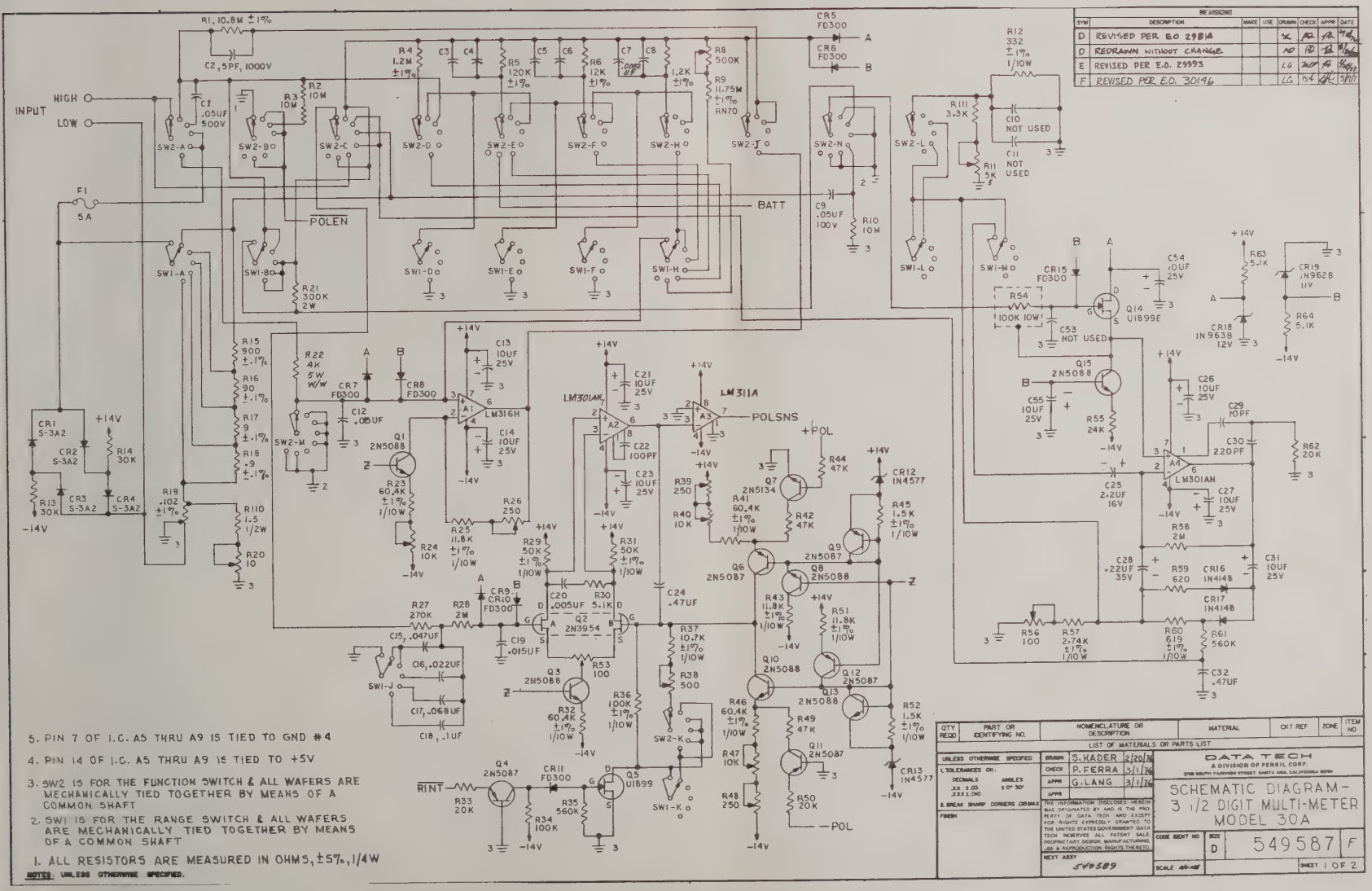

REVISIONS							
SYM	DESCRIPTION	MAKE	USE	DRAWN	CHECK	APPR	DATE
D	REVISED PER E.O. 29814			SK	RP	RP	4/4/70
D	REDRAWN WITHOUT CHANGE			RP	RP	RP	8/4/70
E	REVISED PER E.O. 29993			LG	RP	RP	11/4/70
F	REVISED PER E.O. 30196			LG	DK	RP	5/10/71

5. PIN 7 OF I.C. A5 THRU A9 IS TIED TO GND #4
4. PIN 14 OF I.C. A5 THRU A9 IS TIED TO +5V
3. SW2 IS FOR THE FUNCTION SWITCH & ALL WAFERS ARE MECHANICALLY TIED TOGETHER BY MEANS OF A COMMON SHAFT
2. SW1 IS FOR THE RANGE SWITCH & ALL WAFERS ARE MECHANICALLY TIED TOGETHER BY MEANS OF A COMMON SHAFT
1. ALL RESISTORS ARE MEASURED IN OHMS, ±5%, 1/4W

NOTES: UNLESS OTHERWISE SPECIFIED.

QTY REQD	PART OR IDENTIFYING NO.	NOMENCLATURE OR DESCRIPTION	MATERIAL	CKT REF	ZONE	ITEM NO
		LIST OF MATERIALS OR PARTS LIST				

UNLESS OTHERWISE SPECIFIED
1. TOLERANCES ON:
DECIMALS ANGLES
.XX ±.03 ±0° 30'
.XXX ±.010
2. BREAK SHARP CORNERS .005 MAX
FINISH

DRAWN	S. KADER	2/20/70
CHECK	P. FERRA	3/1/70
APPR	G. LANG	3/1/70
APPR		

THE INFORMATION DISCLOSED HEREIN WAS ORIGINATED BY AND IS THE PROPERTY OF DATA TECH AND EXCEPT FOR RIGHTS EXPRESSLY GRANTED TO THE UNITED STATES GOVERNMENT DATA TECH RESERVES ALL PATENT, SALE, PROPRIETARY DESIGN, MANUFACTURING, USE & REPRODUCTION RIGHTS THERETO.

NEXT ASSY 549589

DATA TECH
A DIVISION OF PERRIL CORP.
2700 SOUTH FAIRVIEW STREET SANTA ANA, CALIFORNIA 92704

SCHEMATIC DIAGRAM — 3 1/2 DIGIT MULTI-METER MODEL 30A

CODE IDENT NO | SIZE D | 549587 | F

SCALE NONE | SHEET 1 OF 2

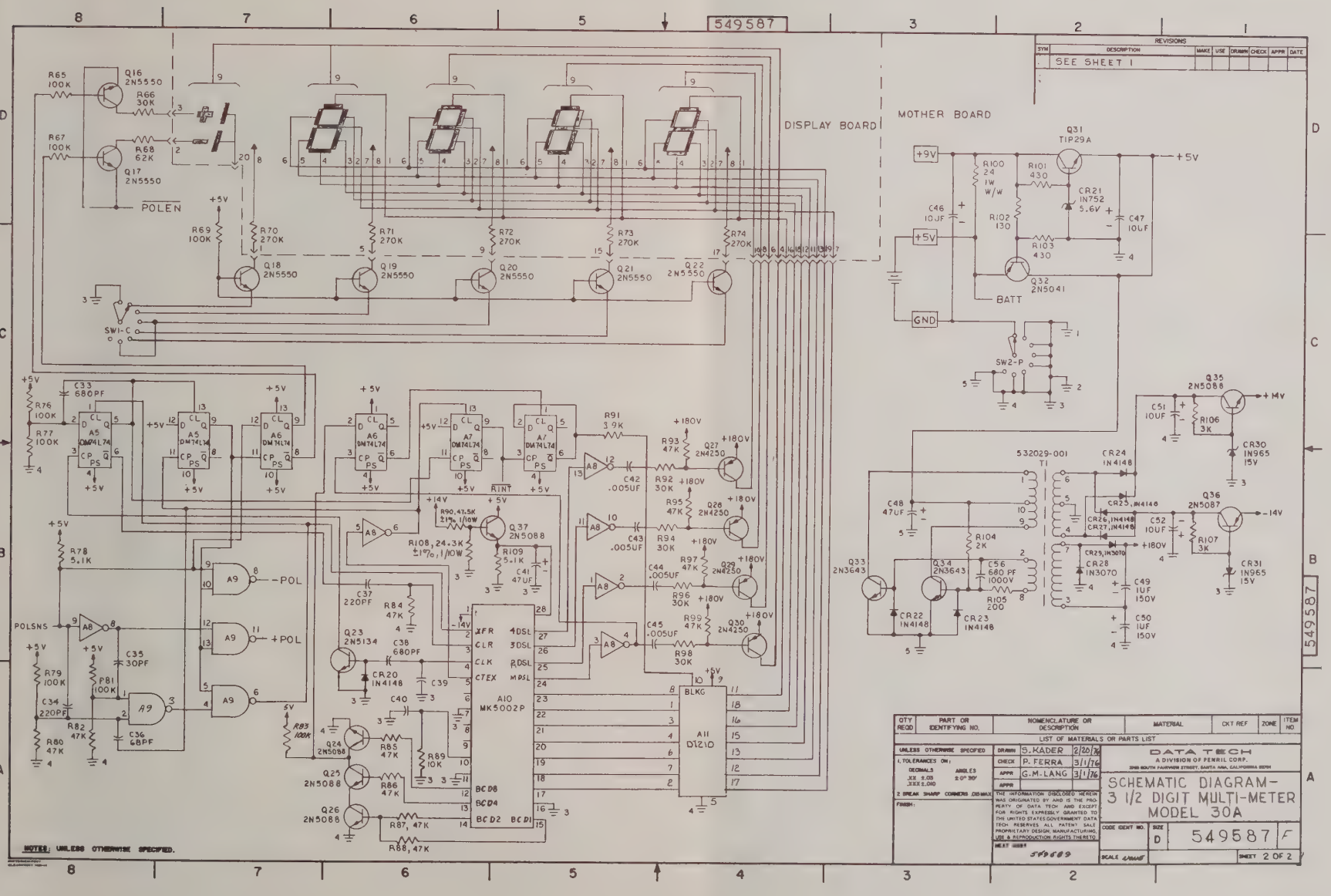
549587
REVISIONS
SYM DESCRIPTION MAKE USE DRAWN CHECK APPR DATE
SEE SHEET 1
DISPLAY BOARD
MOTHER BOARD
POLEN
SW1-C
SW2-P
BATT
+9V
+5V
GND
+14V
-14V
+180V
-POL
+POL
POLSNS
RINT
A10 MK5002P
A11 DI210
BLKG
532029-001 T1
NOTES: UNLESS OTHERWISE SPECIFIED.
QTY REQD
PART OR IDENTIFYING NO.
NOMENCLATURE OR DESCRIPTION
MATERIAL
CKT REF
ZONE
ITEM NO.
LIST OF MATERIALS OR PARTS LIST
UNLESS OTHERWISE SPECIFIED
1. TOLERANCES ON: DECIMALS .XX ±.03 .XXX ±.010 ANGLES ±0° 30'
2. BREAK SHARP CORNERS .015 MAX
FINISH:
DRAWN S. KADER 2/20/76
CHECK P. FERRA 3/1/76
APPR G.M. LANG 3/1/76
APPR
THE INFORMATION DISCLOSED HEREIN WAS ORIGINATED BY AND IS THE PROPERTY OF DATA TECH AND EXCEPT FOR RIGHTS EXPRESSLY GRANTED TO THE UNITED STATES GOVERNMENT DATA TECH RESERVES ALL PATENT SALE PROPRIETARY DESIGN, MANUFACTURING, USE & REPRODUCTION RIGHTS THERETO
NEXT ASSY 549589
DATA TECH
A DIVISION OF PENRIL CORP.
SCHEMATIC DIAGRAM-
3 1/2 DIGIT MULTI-METER
MODEL 30A
CODE IDENT NO.
SIZE D
549587 F
SCALE NONE
SHEET 2 OF 2

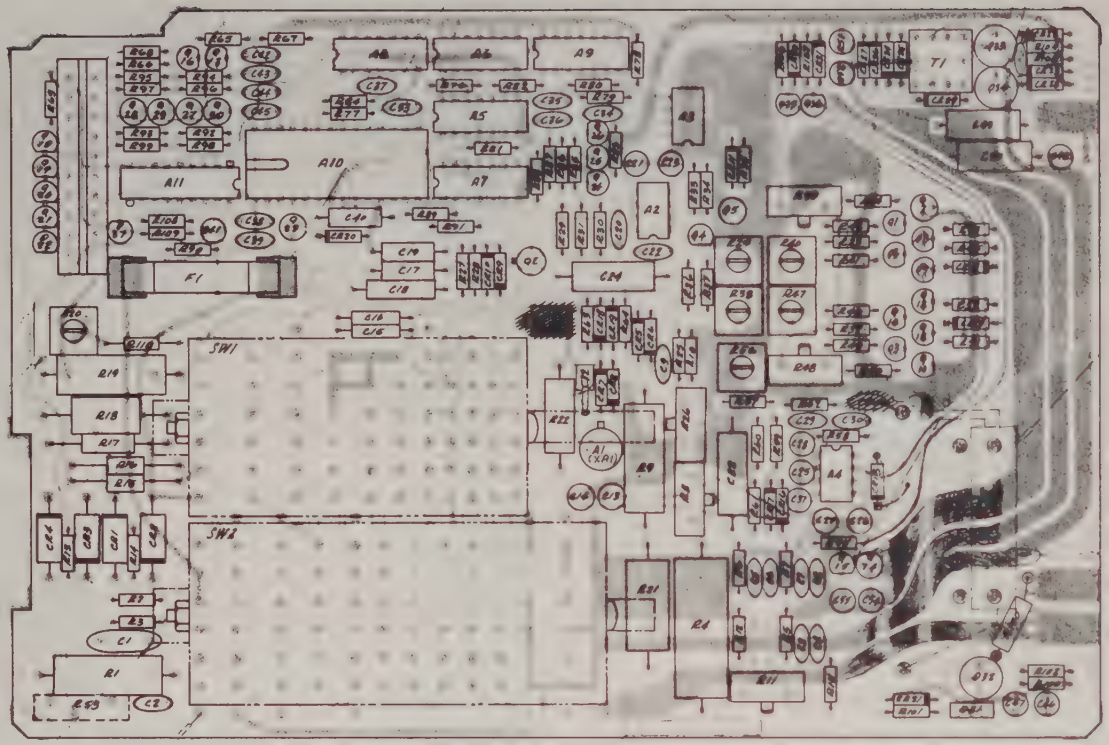

Model 30A Mother board
Drawing Number 549589

Model 30A

Description Mother Board Assembly

REPLACEABLE PARTS LIST

Data Tech No	Description	Source 1		Source 2		Source 3	
		Code Ident	Mfg & Type	Code Ident	Mfg & Type	Code Ident	Mfg & Type
532069-001	A1 Int Ckt, Operational Amplifier	27014	National Semiconductor LM316H				
531968-001	A2, A4 Int Ckt, Operational Amplifier	27014	National Semiconductor LM301AN				
532065-001	A3 Int Ckt, Comparator	27014	National Semiconductor LM311N				
532057-004	A5, A6, A7 Int Ckt	27014	National Semiconductor DM74L74				
532057-002	A8 Int Ckt	27014	National Semiconductor DM74L04				
532057-001	A9 Int Ckt	27014	National Semiconductor DM74L00				
532054-001	A10 Int Ckt		Mostek Corp. MK5002P				
532066-001	A11 Int Ckt		Dionics Inc. DI210				
531338-077	C1 Cap .05μF, 500V	56289	Sprague 5GA-S50				
531338-079	C2 Cap 5pF, 1000V	56289	Sprague 10TS-V50				
531338-999	C3, C4, C6, C8, C39 Cap *Select in Test*	56289	Sprague *Select in Test*				
530333-821	C5 Cap 820pF, 300V		El Menco				
503980-822	C7 Cap .0082μF, 100V	56289	El Menco				
531338-001	C9 Cap .05μF, 100V		Sprague 55C23A7				

Drawing No 549589

Data Tech No	Description	Source 1		Source 2		Source 3	
		Code Ident	Mfg & Type	Code Ident	Mfg & Type	Code Ident	Mfg & Type
531568-013	C12, C19 Cap .015μF	14752	Electro Cube 210B1B153M				
532043-043	C13, C14, C21, C23, C26, C27, C31, C46, C47 C51, C52, C54, C55 Cap 10μF, 25V	14433	ITT Semiconductor TAG-.14-10.0/25-20				
531568-014	C15 Cap .047μF	14752	Electro Cube 210B1B473M				
531568-012	C16 Cap .022μF	14752	Electro Cube 210B1B223M				
531568-001	C17 Cap .068μF	27556	IMB Electronics XA2B683	14752	Electro Cube 210B1B683		
531568-005	C18 Cap .1μF	27556	IMB Electronics XA2C104K	14752	Electro Cube 210B1B104K		
531338-070	C20, C42, C43, C44, C45 Cap .005μF	56289	Sprague 5GA-D50				
531338-038	C22 Cap 100pF, 1000V	56289	Sprague 5GA-T10				
531568-015	C24, C32 Cap .47μF	14752	Electro Cube 210B1B474M				
532043-023	C25 Cap 2.2μF, 16V	14433	ITT Semiconductor TAG-.11-2-.2/16-20				
532043-046	C28 Cap .22μF, 35V	14433	ITT Semiconductor TAG-.11-0.22/35-20				
531338-021	C29 Cap 10pF, 1000V	56289	Sprague 5GA-Q10				
531338-043	C30, C37, C34 Cap 220pF, 1000V	56289	Sprague 5GA-T22				
531338-053	C38 Cap 680pF	56289	Sprague, 5GA-T68				
531338-006	C33 C2P .001						
531338-029	C35 Cap 30pF	56289	Sprague 5GA-Q30				
531338-035	C36 Cap 68pF, 1000V	56289	Sprague 5GA-Q68				
531568-999	C40 Cap *Select in Test*	27556	IMB Electronics Select in Test				
532043-015	C41 C48 Cap 47μF, 6.3V	14433	ITT Semiconductor TAG-.14-47.0/6.3-20				

Drawing No 549589

Data Tech No	Description	Source 1		Source 2		Source 3	
		Code Ident	Mfg & Type	Code Ident	Mfg & Type	Code Ident	Mfg & Type
532053-001	C49, C50 Cap 1.0μF, 150V	09023	Cornell-Dublilier Electric NLW-1-150				
532070-001	CR1, CR2, CR3, CR4 Diode		Semicon, Inc. S-3A2				
531964-001	CR5, CR6, CR7, CR8, CR9, CR10, CR11, CR15 Diode	07263	Fairchild Semiconductor FD300				
818944-250	CR12, CR13 Diode	04713	Motorola 1N4577				
820284-010	CR16, CR17, CR20, CR22, CR23, CR24, CR25, CR26, CR27	07910	Texas Instruments 1N4148	14433	ITT Semiconductor 1N4148		
503458-006	CR19 Diode	04713	Motorola - IN962B	13715	Fairchild - 1N962B	12954	Dickson
503458-007	CR18 Diode	04713	Motorola - IN963B		1N963B		1N963B
503176-007	CR21 Diode	07910	Texas Instruments 1N752A	73293	Huges Aircraft 1N752A		Hoffman Electronics 1N752A
532067-001	CR28, CR29 Diode	13715	Fairchild Semiconductor 1N3070				
503458-009	CR30, CR31 Diode	04713	Motorola 1N965	13715	Fairchild Semiconductor 1N965	12954	Dickson 1N965
*532032-200	R1 Res 10.8M	14506	Data Tech 532032-200				
503100-106	R2, R3, R10 Res 10M, 1/4W, 5%	01121	Allen Bradley CB1065	09021	Airco Speer 4R106J		
*532032-200	R4 Res 1.2M	14506	Data Tech 532032-200				
*532032-200	R5 Res 120k	14506	Data Tech 532032-200				
*532032-200	R6 Res 12k	14506	Data Tech 532032-200				
*532032-200	R7 Res 1.2k	14506	Data Tech 532032-200				
532021-007	R8 Pot 500k	80294	Bourns 3353W-1-504				

*matched set

Drawing No 549589

Data Tech No	Description	Source 1		Source 2		Source 3	
		Code Ident	Mfg & Type	Code Ident	Mfg & Type	Code Ident	Mfg & Type
531986-012	R9 Res 11.75 M	03888	Pyroflim PME70-T2-11.75M ±1				
532021-005	R11 Pot 5k	80294	Bourns 3353W-1-502				
532050-147	R12 Res 332Ω, 1/10W, ±1%	28363	Corning Glass Technical Products Div. NA55				
503100-303	R13, R14, R66, R92, R94, R96, R98 Res 30k, 1/4W, 5%	01121	Allen Bradley CB3035	09021	Airco Speer 4R303J		
532031-001	R15 Res 900Ω, 1/4W	14506	Data Tech 532031-001				
532031-002	R16 Res 90Ω	14506	Data Tech 532031-002				
532031-003	R17 Res 9Ω	14506	Data Tech 532031-003				
532031-004	R18 Res .9Ω	14506	Data Tech 532031-004				
532031-005	R19 Res .102Ω	14506	Data Tech 532031-005				
531970-100	R20 Pot 10Ω	73138	Beckman Instruments 72PMR10k				
503103-304	R21 Res 300k, 2W, 5%	01121	Allen Bradley RC42GF304J	09021	Airco Speer RC42GF304J		
532046-008	R22 Res 4k 6 5W	07088	Kelvin Electric				
531854-352	R23, R32, R41, R46 Res 60.4k, 1/10W, ±1%	80031	Mepco RN55E6042F	19701	Electra/Midland RN55E6042F		
531970-001	R24, R40, R47 Pot 10k	73138	Beckman Instruments 72PMR10K				
531854-351	R25, R43, R51 Res 11.8k, 1/10W, ±1%	80031	Mepco RN55E1182F	19701	Electra/Midland RN55E1182F		

Drawing No 549589

Data Tech No	Description	Source 1		Source 2		Source 3	
		Code Ident	Mfg & Type	Code Ident	Mfg & Type	Code Ident	Mfg & Type
532021-002	R26, R39, R48 Pot 250Ω		Piher PT15YB-250				
503100-274	R27 Res 270k, 1/4W, 5%	01121	Allen Bradley CB2745	09021	Airco Speer 4R274J		
503100-205	R28, R58 Res 2M, 1/4W, 5%	01121	Allen Bradley CB2055	09021	Airco Speer 4R205J		
531572-015	R29, R31 Res 50k, 1/10W, ±.1%	03888	Pyrofilm RN55E503B				
503100-512	R30, R63, R64, R78, R109 Res 5.1k 1/4W, 5%	01121	Allen Bradley CB5125	09021	Airco Speer 4R512J		
503100-203	R33, R50, R62 Res 20k, 1/4W, 5%	01121	Allen Bradley CB2035	09021	Airco Speer 4R203J		
503100-104	R34, R65, R67, R69, R76, R77, R79, R81, R83 Res 100k, 1/4W, 5%	01121	Allen Bradley CB1045	09021	Airco Speer 4R104J		
503100-564	R35, R61 Res 560k, 1/4W, 5%	01121	Allen Bradley CB5645	09021	Airco Speer 4R564J		
531854-353	R36 Res 100k, 1/10W, ±1%	80031	Mepco RN55E1003F	19701	Electra/Midland RN55E1003F		
531854-350	R37 Res 10.7k, 1/10W, ±1%	80031	Mepco RN55E1072F	19701	Electra/Midland RN55E1072F		
531970-501	R38 Pot 500Ω	73138	Beckman Instruments 72PMR500				
503100-473	R42, R44, R49, R82, R84, R85, R86, R87, R88, R93, R95, R97, R99, R80 Res 47k, 1/4W, 5%	01121	Allen Bradley CB4735	09021	Airco Speer 4R473J		
532050-210	R45, R52 Res 1.5k, 1/4W, 5%	28363	Corning Glass Technical Products Div. NA55				
531866-005	R53 Pot 200Ω	73138	Beckman Instruments 89PR200	80294	Bourns 3006P-1-201		
549594-200	R54 Res 100k, 10W, W/W	07088	Kelvin Electric KM1000				

Drawing No 549589

Data Tech No	Description	Source 1		Source 2		Source 3	
		Code Ident	Mfg & Type	Code Ident	Mfg & Type	Code Ident	Mfg & Type
503100-243	R55 Res 24k, 1/4W, 5%	01121	Allen Bradley CB2435	09021	Airco Speer 4R243J		
531970-101	R56 Pot 100Ω	73138	Beckman Instruments 72PMR100				
532050-235	R57 Res 2.74k, 1/10W, ±1%	28363	Corning Glass Technical Products Div. NA55				
503100-621	R59 Res 620Ω, 1/4W, 5%	01121	Allen Bradley CB6215	09021	Airco Speer 4R621J		
532050-173	R60 Res 619Ω, 1/10W, ±1%	28363	Corning Glass Technical Products Div. NA55				
503100-623	R68 Res 62k, 1/4W, 5%	01121	Allen Bradley CB6235	09021	Airco Speer 4R623J		
503100-103	R89 Res 10k, 1/4W, 5%	01121	Allen Bradley CB1035	09021	Airco Speer 4R103J		
532050-418	R90 Res 47.5k, 1/10W, ±1%	28363	Corning Glass Technical Products Div. NA55				
503102-240	R100 Res 24Ω, 1W, 5%	01121	Allen Bradley RC32GF240J	09021	Airco Speer RC32GF2J		
503100-431	R101, R103 Res 430Ω, 1/4W, 5%	01121	Allen Bradley CB4315	09021	Airco Speer 4R431J		
503100-131	R102 Res 130Ω, 1/4W, 5%	01121	Allen Bradley CB1315	09021	Airco Speer 4R131J		
503100-202	R104 Res 2k, 1/4W, 5%	01121	Allen Bradley CB2025	09021	Airco Speer 4R202J		
503100-201	R105 Res 200Ω, 1/4W, 5%	01121	Allen Bradley CB2015	09021	Airco Speer 4R201J		
503100-302	R106, R107 Res 3k, 1/4W, 5%	01121	Allen Bradley CB3025	09021	Airco Speer 4R302J		
532050-390	R108 Res 24.3k, 1/10W, ±1%	28363	Corning Glass Technical Products Div. NA55				
503100-392	R91 Res 3.9k, 1/4W, 5%	01121	Allen Bradley, CB3925				

Drawing No 549589

Data Tech No	Description	Source 1		Source 2		Source 3	
		Code Ident	Mfg & Type	Code Ident	Mfg & Type	Code Ident	Mfg & Type
503101-015	R110 Res 1.5 Ω, 1/2W, 5%	01121	Allen Bradley EB15G5	09021	Airco Speer SR1/2 1R5J		
503100-332	R111 Res 3.3k, 1/4W, 5%	01121	Allen Bradley CB3325	09021	Airco Speer 4R322J		
818954-010	Q1, Q3, Q8, Q10, Q13, Q15, Q24, Q25, Q26 Q35, Q37 Transistor	13715	Fairchild Semiconductor 2N5088				
532189-001	Q2 Transistor	17856	Siliconix E7028				
531966-001	Q4, Q6, Q9, Q11, Q12, Q36 Transistor	04713	Motorola 2N5087				
531785-001	Q5, Q14 Transistor	27014	National Semiconductor U1899E				
818956-010	Q7, Q23 Transistor	13715	Fairchild Semiconductor 2N5134				
531952-001	Q16, Q17, Q18, Q19, Q20, Q21, Q22 Transistor	04713	Motorola 2N5550				
531772-001	Q27, Q28, Q29, Q30 Transistor	13715	Fairchild Semiconductor 2N4250				
822126-010	Q31 Transistor	07910	Texas Instruments TIP29A				
532071-001	Q32 Transistor	13715	Fairchild Semiconductor 2N5041				
530719-002	Q33, Q34 Transistor	13715	Fairchild Semiconductor 2N3643				
503067-022	F1, Fuse 5A, 3AG	75915	Littlefuse 312005				
532036-002	SW1 Switch, Rotary (RANGE)		CTS Keene Inc. 212 T Bird Series				
532036-001	SW2 Switch, Rotary (FUNCTION)		CTS Keene Inc. 212 T Bird Series				
532029-001	T1 Transformer		PCA Electronics EP6361A				

Drawing No 549589

REVISIONS							
SYM	DESCRIPTION	MAKE	USE	DRAWN	CHECK	APPR	DATE
A	RELEASED PER E.O. 27784			JWH	[illegible]	[illegible]	9/13/73
B	REVISED PER EO 27906		✓	[illegible]	[illegible]	[illegible]	9/13/73
C	REVISED PER EO 29344			[illegible]	[illegible]	[illegible]	1/26/76

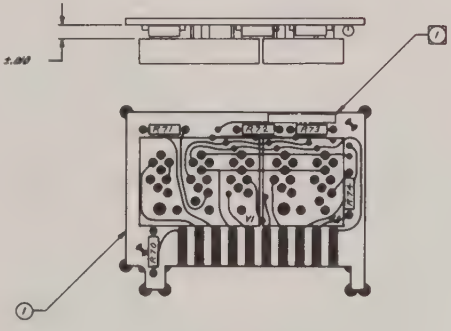

QTY REQD	QTY REQD	PART OR IDENTIFYING NO.	NOMENCLATURE OR DESCRIPTION	MATERIAL	CKT REF	ZONE	ITEM NO.
							10
~~1~~			~~SOCKET 8 DIGIT~~		~~XV2~~		~~9~~
~~1~~			~~SOCKET 2½ DIGIT~~		~~XV1~~		~~8~~
							7
1	1	532068-001	DISPLAY 2 DIGIT		V2		6
1	1	532068-002	DISPLAY 2½ DIGIT		V1		5
							4
5	5	508100-274	RESISTOR 270K, ±5%, ¼W		R70 – R74		3
							2
1	1	548312-001	PRINTED WIRING BOARD				1
-201	-200	LIST OF MATERIALS OR PARTS LIST					

548313

UNLESS OTHERWISE SPECIFIED
1. TOLERANCES ON
DECIMALS XX ± .03 XXX ± .010
ANGLES ± 0° 30'
2. BREAK SHARP CORNERS .015 MAX
FINISH.

DRAWN	[signature]	9/14/73
CHECK	[signature]	9/14/73
APPR	[signature]	9/13/73
APPR		

THE INFORMATION DISCLOSED HEREIN WAS ORIGINATED BY AND IS THE PROPERTY OF DATA TECHNOLOGY CORP AND EXCEPT FOR RIGHTS EXPRESSLY GRANTED TO THE UNITED STATES GOVERNMENT DATA TECHNOLOGY CORP RESERVES ALL PATENT SALE PROPRIETARY DESIGN MANUFACTURING USE AND REPRODUCTION RIGHTS THERETO

NEXT ASSY

DISPLAY BOARD ASSY - 3½ DIGIT MODEL 30

CODE IDENT NO	SIZE		
14506	C	548313	C
SCALE		SHEET 1 OF 1	

1 IDENTIFY PER DATA TECH SPEC 505758

NOTES: UNLESS OTHERWISE SPECIFIED

FORM NO DTC-0013

REPLACEABLE PARTS LIST

Model 30 A

Description Display Board Assembly

Data Tech No	Description	Source 1		Source 2		Source 3	
		Code Ident	Mfg & Type	Code Ident	Mfg & Type	Code Ident	Mfg & Type
503100-274	R70 — R74 Res 270k, 1/4W, 5%	01121	Allen Bradley CB2735	09026	Airco Speer 4R273J		
532068-002	V1 Display, 2-1/2 Digit	07187	Sperry Information Displays Division SP334				
532068-001	V2 Display, 2 Digit	07187	Sperry Information Displays Division SP332				

Drawing No 548313 B Ref

Printed in USA